ICC-ES Evaluation Report

ESR-3449

Reissued October 2025

Revised August 2026

This report remains under an active continuous compliance program through the end of October 2027

This report also contains:

- **City of LA Supplement**
- **CA Supplement**
- **FL Supplement w/ HVHZ**

ICC-ES Evaluation Reports are not to be construed as representing aesthetics or any other attributes not specifically addressed, nor are they to be construed as an endorsement of the subject of the report or a recommendation for its use. There is no warranty by ICC Evaluation Service, LLC, express or implied, as to any finding or other matter in this report, or as to any product covered by the report.

Copyright © 2026 ICC Evaluation Service, LLC. All rights reserved.

DIVISION: 06 00 00—WOOD, PLASTICS AND COMPOSITES Section: 06 05 23—Wood, Plastic, and Composite Fastenings	REPORT HOLDER: MITEK® INC.	EVALUATION SUBJECT: MITEK® CAPS AND BASES FOR WOOD-FRAMED CONSTRUCTION	

1.0 EVALUATION SCOPE

Compliance with the following codes:

- 2024, 2021, 2018, 2015 and 2012 *International Building Code®* (IBC)
- 2024, 2021, 2018, 2015 and 2012 *International Residential Code®* (IRC)

Property evaluated:

- Structural

2.0 USES

The MiTek structural connectors described in this report (see Table 11 for complete listing) are used for connecting wood framing members in accordance with Section 2304.10.4 of the 2024 and 2021 IBC (Section 2304.10.3 of the 2018 and 2015 IBC, and Section 2304.9.3 of the 2012 IBC). The connectors may also be used in structures regulated under the IRC when an engineered design is submitted to, and approved by, the code official, in accordance with IRC Section R301.1.3.

3.0 DESCRIPTION

3.1 C Post Cap:

The C Post Cap is designed to be installed on top of nominal dimension or rough sawn lumber posts for the attachment of solid-sawn beams. The C Post Cap is cold-formed from No. 18 gage steel and is prepunched for 16d common nails. See Table 1 and Figure 1 for product dimensions, fastener schedule, allowable loads, and a typical installation detail.

3.2 D Post Anchor:

The D Post Anchor is designed to secure nominal dimensioned or rough sawn posts to wood surfaces. The D Post Anchor is cold-formed from No. 18 gage steel and is prepunched for 16d common nails. See Table 2 and Figure 2 for product dimensions, fastener schedule, allowable loads, and a typical installation detail.

3.3 KCC and KECC Column Caps:

The KCC and KECC column caps are designed for beam-to-post connections. The KCC column cap provides connections for continuous beams, while the KECC column cap provides connections for end-of-beam configurations. The KCC and KECC column caps are fabricated from No. 7 gage or No. 3 gage hot-rolled steel

plate. The legs of the column caps are attached to the U-shaped cap with factory-welded fillet welds. KCC and KECC column caps are attached to the post and beams utilizing either $^5/_8$- or $^3/_4$-inch-diameter (15.9 or 19.1 mm) bolts. See Table 3 and Figure 3 for product dimensions, fastener schedules, allowable loads, and a typical installation detail.

3.4 KCCQ and KECCQ Column Caps:

The KCCQ and KECCQ Column Caps are designed to connect wood beams to column posts utilizing MiTek Pro Series WS3 wood screws, which are supplied with the device. The column caps are fabricated from No. 7 gage or No. 3 gage hot-rolled steel, and are painted subsequent to fabrication. The connectors consist of a U-shaped plate, factory-welded to two vertical straps with $^3/_{16}$-inch (4.8 mm) fillet welds. See Table 4 and Figure 4 for product dimensions, fastener schedule, allowable loads, and typical installation details.

3.5 PA Post Anchor:

The PA post anchor is designed to secure wood posts to concrete foundations. The anchor base is cold-formed from either No. 14 gage or No. 18 gage steel, and the stand-off plate is cold-formed from either No. 10 gage, No. 12 gage or No. 16 gage steel. The PA post anchor is prepunched for 16d common nails into the post, and must be used with either a $^1/_2$- or $^5/_8$-inch-diameter (12.7 or 15.9 mm) anchor bolt, as indicated in Table 5. See Table 5 and Figure 5 for product dimensions, fastener schedules, allowable loads, and typical installation details.

3.6 PAF Post Anchor:

The PAF post anchor is designed to secure wood posts to concrete foundations. The anchor base is cold-formed from No. 14 gage steel. The PAF post anchor is prepunched for 10d Common or 16d Common nails into the post, and must be used with either a $^1/_2$- or $^5/_8$-inch diameter (12.7 or 15.9 mm) anchor bolt, as indicated in Table 6. See Table 6 and Figure 6 for product dimensions, fastener schedules, allowable loads, and typical installation details.

3.7 PAU Post Anchor:

The PAU Post Anchor is designed to secure wood posts to concrete or masonry members. The PAU Post Anchor is composed of three components: an anchor base, a stand-off plate, and a washer. The anchor base is cold-formed from No. 10 gage or No. 12 gage steel. The stand-off plate is cold-formed from either No. 12 gage or No. 16 gage steel. The washer is cut from No. 3 gage or No. 10 gage steel. The PAU Post Anchor is fastened to the post with either 16d common nails or $^1/_2$-inch-diameter (12.7 mm) bolts. The PAU Post Anchor is fastened to the concrete or masonry foundation utilizing $^5/_8$-inch-diameter (15.9 mm) anchor bolts, expansion anchors or threaded rod, which must be designed separately. See Table 7 and Figure 7 for product dimensions, required fastener schedule, allowable loads, and a typical installation detail.

3.8 PB, PBES and PBS Post Caps:

The PB, PBES and PBS Post Caps are designed to provide a post-to-beam connection of nominally dimensioned or rough sawn lumber. The PBES and PBS are required to be used in pairs (one on each side of the connection) at each connection location. The PB, PBES and PBS Post Caps are cold-formed from No. 18 gage steel and are prepunched for 16d common nails. See Table 8 and Figure 8 for product dimensions, fastener schedule, allowable loads, and typical installation details.

3.9 PCM and EPCM Post Caps:

The PCM and EPCM Post Caps are designed to provide a positive connection for post-to-beam applications. The post caps are cold-formed from either No. 12 gage or No. 16 gage steel, and are prepunched for 16d common nails. The PCM is configured for a beam that is continuous over the post, and the EPCM is configured for applications at the end of a beam. See Table 9 and Figure 9 for product dimensions, fastener schedule, allowable loads, and a typical installation detail.

3.10 PBC Post Beam Corner Connector:

The PBC Post Beam Corner Connector is a one-piece connector designed to secure two mitered beams on a corner post while providing uplift capacity. The connector is cold-formed from No. 18 gage steel, and is prepunched for 16d common nails. See Table 10 and Figure 10 for product dimensions, fastener schedule, allowable loads, and a typical installation detail.

3.11 Materials:

3.11.1 Steel: The specific types of steel and corrosion protection for each product are described in Table 11 of this report. Minimum steel base-steel thicknesses for the different gages are shown in the following table:

GAGE NO.	MINIMUM BASE-STEEL THICKNESS (inch)
18	0.044
16	0.055
14	0.070
12	0.099
10	0.129
7	0.171
3	0.240

For **SI:** 1 inch = 25.4 mm.

3.11.2 Wood: Wood members must be sawn lumber or structural glued laminated timber with a minimum specific gravity of 0.50, or approved structural engineered lumber (structural composite lumber, alternative strand lumber, or prefabricated wood I-joists) with a minimum equivalent specific gravity of 0.50, unless otherwise noted in the applicable table within this report. Wood members must have a moisture content not exceeding 19 percent (16 percent for structural engineered lumber), except as noted in Section 4.1. For connectors installed with nails, the thickness of each wood member must be sufficient such that the specified fasteners do not protrude through the opposite side of the member, unless otherwise permitted in the applicable table within this report. Wood members that are structural engineered lumber must be addressed in, and used in accordance with, a current evaluation report. Refer to Section 3.11.4 for issues related to treated wood.

3.11.3 Fasteners: Required fastener types and sizes for use with the MiTek connectors described in this report are specified in this section and Tables 1, 2,3,4, 5, 6, 7, 8, 9 and 10.

3.11.3.1 MiTek Pro Series Wood Screws: The wood screws used with the KCCQ and KECCQ connectors must be MiTek Pro Series WS3 wood screws, as described in ESR-2761. The appropriate size of MiTek Pro Series WS wood screws must be used, as indicated in the applicable tables of this report.

3.11.3.2 Bolts: At a minimum, bolts must comply with ASTM A307 and must have a minimum bending yield strength of 45,000 lbf/in.^{2} (310 MPa). Bolt diameters must be as specified in the applicable tables of this report.

3.11.3.3 Nails: Nails used for connectors described in this report must be bright or hot-dipped galvanized carbon steel nails complying with material requirements, physical properties, tolerances, workmanship, protective coating and finishes, and packaging and package marking requirements specified in ASTM F1667; and must have lengths, diameters and bending yield strengths as shown in the following table:

FASTENER DESIGNATION	FASTENER LENGTH (inches)	SHANK DIAMETER (inch)	MINIMUM REQUIRED F_{yb} (psi)
10d common	3	0.148	100,000
16d common	3.5	0.162	90,000
$^1/_2$" dia. bolt	Varies	0.500	45,000
$^5/_8$" dia. bolt	Varies	0.625	45,000
$^3/_4$" dia. bolt	Varies	0.750	45,000

For SI: 1 inch = 25.4 mm, 1 psi = 6.895 kPa.

Alternatively, nails of other materials or finishes may be used when they are addressed in an ICC-ES evaluation report as having bending yield strength and withdrawal capacity equal to or better than those of a bright carbon steel of the same nominal diameter.

3.11.4 Use in Treated Wood: Connectors and fasteners used in contact with preservative-treated or fire-retardant-treated wood must comply with Section 2304.10.6 of the 2024 and 2021 IBC (Section 2304.10.5 of the 2018 and 2015 IBC and Section 2304.9.5 of the 2012 IBC) and Section R304.3 of the 2024 IRC (Section R317.3 of the 2021, 2018, 2015, and 2012 IRC). The lumber treater or the report holder (MiTek), or both, should be contacted for recommendations on the appropriate level of corrosion resistance to specify for the

connectors and fasteners as well as the connection capacities of the fasteners used with the specific proprietary preservative-treated or fire-retardant-treated lumber.

3.11.5 Concrete and Masonry Construction: Materials and quality of concrete and masonry construction must comply with the applicable provisions of Chapter 19 and 21 of the IBC. The compressive strength of the concrete and masonry construction must be in accordance with the approved design and applicable provisions of the building code.

4.0 DESIGN AND INSTALLATION

4.1 Design:

The allowable load capacities in Tables 1, 2, 3, 4, 5, 6, 7, 8, 9 and 10 are based on allowable stress design. The use of the allowable load values for the products listed in Table 12 of this report must comply with all applicable requirements and conditions specified in this report. Tabulated allowable loads are for normal load duration and/or short load duration, based on load duration factors, C_D, in accordance with Section 11.3.2 of the 2024, 2018 and 2015 ANSI/AWC *National Design Specification® for Wood Construction* (NDS) (Section 10.3.2 of the 2012 NDS), as indicated in Tables 1 2, 3, 4, 5, 6, 7, 8, 9 and 10 of this report. No further increases are permitted for load durations other than those specified. Tabulated allowable loads are for connections in wood seasoned to a maximum moisture content of 19 percent (16 percent for engineered wood products) or less, used under continuously dry conditions and where sustained temperatures are limited to 100°F (37.8°C) or less. When connectors are installed in wood having a moisture content greater than 19 percent (16 percent for engineered wood products), or where the in-service moisture content is expected to exceed this value, the applicable wet service factor, C_M, must be applied. Unless otherwise noted in the tables of this report, the applicable wet service factor, C_M, is as specified in the NDS for lateral loading of dowel-type fasteners. When connectors are installed in wood that will experience sustained exposure to temperatures exceeding 100°F (37.8°C), the allowable loads in this evaluation report must be adjusted by the temperature factor, C_t, specified in Section 11.3.4 of the 2024, 2018 and 2015 NDS (Section 10.3.4 of the 2012 NDS). The group action factor, C_g, has been accounted for, in accordance with Section 11.3.6 of the 2024, 2018 and 2015 NDS (Section 10.3.6 of the 2012 NDS), in the tabulated allowable loads, where applicable. For connectors installed with bolts, minimum edge distances and end distances within the wood members must be met, such that the geometry factor, C_Δ, is 1.0, in accordance with Section 12.5.1 of the 2024, 2018 and 2015 NDS (Section 11.5.1 of the 2012 NDS), unless otherwise noted in this report. Connected wood members must be checked for load-carrying capacity at the connection in accordance with Section 11.1.2 of the 2024, 2018 and 2015 NDS (Section 10.1.2 of the 2012 NDS).

4.2 Installation:

Installation of the connectors must be in accordance with this evaluation report and the manufacturer's published installation instructions. Mechanical fasteners must be installed in wood members in accordance with Section 12.1 of the 2024, 2018 and 2015 NDS (Section 11.1 of the 2012 NDS).

4.3 Special Inspection:

4.3.1 Main Wind-Force-Resisting Systems under the IBC: Periodic special inspection must be conducted for components within the main wind-force-resisting system, where required in accordance with Sections 1704.2 and 1705.12 of the 2024 and 2021 IBC (Sections 1704.2 and 1705.11 of the 2018 and 2015 IBC, and 1705.10 of the 2012 IBC).

4.3.2 Seismic-Force-Resisting Systems under the IBC: Periodic special inspection must be conducted for components within the seismic-force-resisting system, where required in accordance with Sections 1704.2 and 1705.13 of the 2024 and 2021 IBC (Section 1704.2 and 1705.12 of the 2018 and 2015 IBC, and 1705.11 of the 2012 IBC).

4.3.3 Installations under the IRC: Special inspections are normally not required for connectors used in structures regulated under the IRC. However, for components and systems requiring an engineered design in accordance with IRC Section R301, periodic special inspection requirements and exemptions must be in accordance with Sections 4.3.1 and 4.3.2 of this report.

5.0 CONDITIONS OF USE:

The MiTek® Structural Connectors described in this report comply with, or are suitable alternatives to what is specified in, those codes listed in Section 1.0 of this report, subject to the following conditions:

5.1 The connectors must be manufactured, identified and installed in accordance with this report and the manufacturer's published installation instructions. A copy of the manufacturer's published installation instructions must be available at the jobsite at all times during installation. In the event of a conflict between this report and the manufacturer's published installation instructions, this report governs.

5.2 Calculations showing compliance with this report must be submitted to the code official. The calculations must be prepared by a registered design professional where required by the statutes of the jurisdiction in which the project is to be constructed.

5.3 Connected wood members and fasteners must comply with Sections 3.11.2 and 3.11.3, respectively.

5.4 Adjustment factors, noted in Section 4.1 of this report and the applicable codes, must be considered where applicable.

5.5 Use of connectors and fasteners with preservative-treated or fire-retardant-treated lumber must be in accordance with Section 3.11.4.

5.6 The design of the anchorage to, and bearing upon, concrete or masonry construction, inclusive of cast-in-place and post-installed anchors, used to attach the connectors described in this report to concrete or masonry construction, is outside the scope of this report.

5.7 The connectors are manufactured under quality control programs with inspections by ICC-ES.

6.0 EVIDENCE SUBMITTED

Data in accordance with the ICC-ES Acceptance Criteria for Joist Hangers and Similar Devices (AC13), approved October 2018 (editorially revised February 2024).

7.0 IDENTIFICATION

7.1 Each connector described in this report is identified by the product model (stock) number, the number of the ICC-ES index evaluation report for MiTek (ESR-2685), and by one or more of the following designations: MiTek, USP or USP Structural Connectors.

7.2 The report holder's contact information is the following:

MITEK® INC.
16023 SWINGLEY RIDGE ROAD
CHESTERFIELD, MISSOURI 63017
800-328-5934
www.mitek-us.com
uspcustomerservice@mii.com

TABLE 1—C POST CAP ALLOWABLE LOADS[1,2,3]

STOCK NO.	STEEL GAGE	DIMENSIONS (inches)						FASTENER SCHEDULE			ALLOWABLE LOADS (lbf)	
		W1	W2	L1	L2	H1	H2	Qty.		Nail Type	Uplift	Lateral (F1 & F2)
								Post	Beam		C_D = 1.6	C_D = 1.6
C44	18	$3^9/_{16}$	$3^9/_{16}$	$3^1/_4$	$3^1/_4$	$2^7/_8$	$2^7/_8$	6	6	16d Common	925	1,105
C44R	18	4	4	$3^1/_4$	$3^1/_4$	$2^5/_8$	$2^5/_8$	8	8	16d Common	925	1,105
C46	18	$3^9/_{16}$	$5^1/_2$	$3^3/_8$	$5^1/_4$	$2^9/_{16}$	$2^5/_8$	6	10	16d Common	925	1,105
C46R	18	4	6	$3^1/_4$	$5^1/_4$	$2^3/_4$	$2^3/_4$	8	10	16d Common	925	1,105
C66	18	$5^1/_2$	$5^1/_2$	$5^1/_2$	$5^1/_4$	$2^7/_8$	$2^7/_8$	12	12	16d Common	1,195	2,100
C66R	18	6	6	$5^1/_4$	$5^1/_4$	$2^{13}/_{16}$	$2^{13}/_{16}$	10	10	16d Common	955	2,210
C88	18	$7^1/_2$	$7^1/_2$	$7^3/_8$	$7^3/_8$	5	5	16	16	16d Common	1,195	2,260
C88R	18	8	8	$7^3/_8$	$7^3/_8$	5	5	16	16	16d Common	1,195	2,260

For **SI:** 1 inch = 25.4 mm, 1 lbf = 4.45 N.

[1]Allowable loads have been adjusted for a load duration factor, C_D, of 1.6, corresponding to a ten-minute load duration (i.e., wind or earthquake loading), in accordance with the NDS. The allowable loads do not apply to loads of other durations. See Sections 4.1 and 4.2 for design and installation requirements.
[2]See Section 3.11.3 for required fastener dimensions and mechanical properties.
[3]Allowable loads shown are for installations in wood members complying with Section 3.11.2.

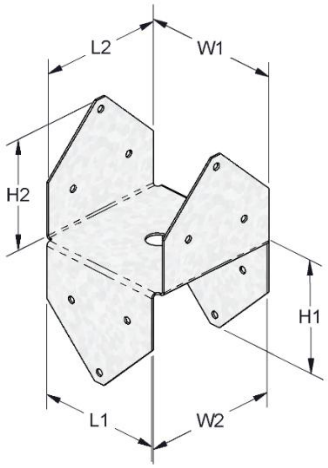

C Post Cap

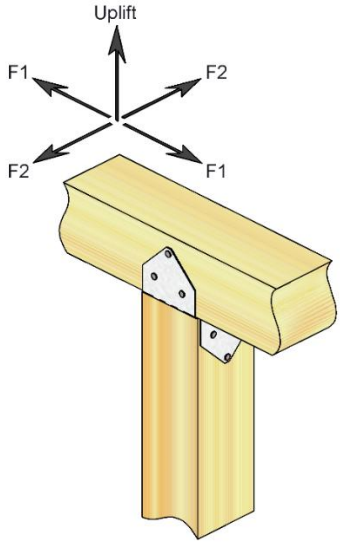

Typical C Post Cap Installation

FIGURE 1—C POST CAP

TABLE 2—D POST ANCHOR ALLOWABLE LOADS[1,2,3,4]

STOCK NO.	STEEL GA.	DIMENSIONS (inches)			FASTENER SCHEDULE			ALLOWABLE LOADS (lbf)		
		W	H	L	Qty.		Nail Type	F1	F2	Uplift
					Post	Beam		C_D = 1.6	C_D = 1.6	C_D = 1.6
D44-TZ	18	$3^9/_{16}$	$2^1/_2$	$3^3/_8$	8	4	16d Common	885	885	700
D44R	18	4	3	$3^3/_4$	8	4	16d Common	885	885	700
D46	18	$3^9/_{16}$	3	$5^3/_8$	10	5	16d Common	995	1,095	700
D46R-TZ	18	4	3	53/8	10	5	16d Common	995	1,095	700
D66	18	$5^1/_2$	3	$5^3/_8$	10	5	16d Common	995	1,095	700
D66R	18	6	3	$5^3/_8$	10	5	16d Common	995	1,095	700
D88	18	$7^1/_2$	3	$7^3/_8$	12	5	16d Common	995	1,095	700
D88R	18	8	3	$7^3/_8$	12	5	16d Common	995	1,095	700

For **SI:** 1 inch = 25.4 mm, 1 lbf = 4.45 N.

[1]Allowable loads have been adjusted for a load duration factor, C_D, of 1.6, corresponding to a ten-minute load duration (i.e., wind or earthquake loading), in accordance with the NDS. The allowable loads do not apply to loads of other durations. See Sections 4.1 and 4.2 for design and installation requirements.
[2]See Section 3.11.3 for required fastener dimensions and mechanical properties.
[3] Allowable loads shown are for installations in wood members complying with Section 3.11.2.
[4]The supporting beam must have a minimum dimension of 3.5 inches (89 mm) in the direction parallel to the nail axis.
[5]When connectors are installed in wood having a moisture content greater than 19 percent (16 percent for engineered wood products), or where the moisture content is expected to exceed this value at any time while in service, the allowable uplift load must be adjusted by the applicable wet service factor, C_M, as specified for withdrawal loads of nails and spikes in the NDS. Wet service factors, C_M, applicable to the F1 and F2 load directions are as specified for lateral loads of dowel-type fasteners in the NDS.

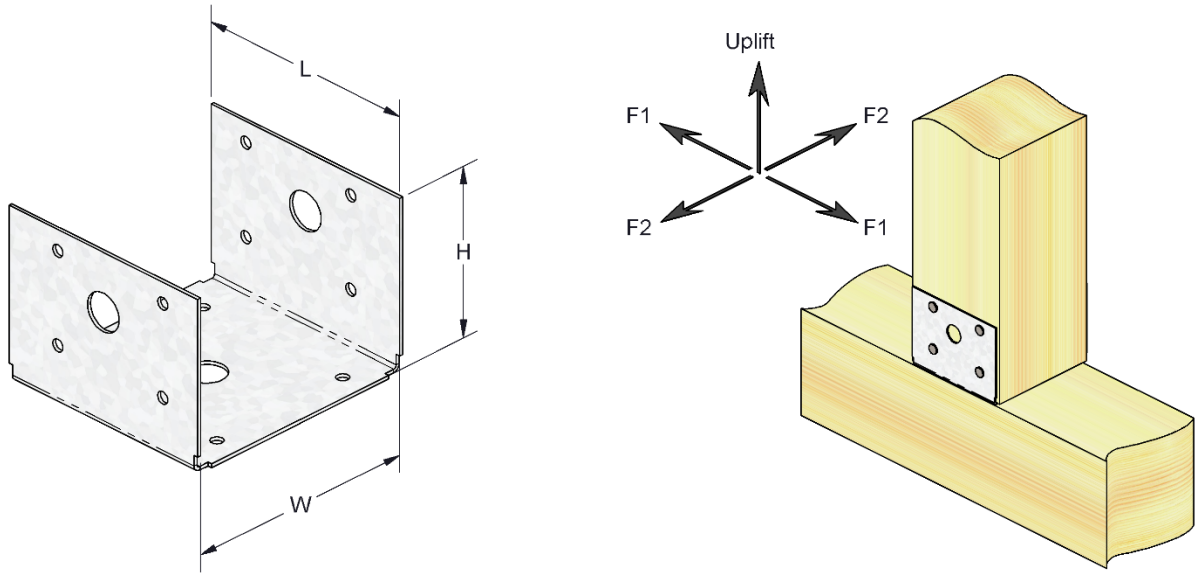

D Post Anchor

Typical D Post Anchor Installation

FIGURE 2—D POST ANCHOR

TABLE 3—KCC AND KECC COLUMN CAP ALLOWABLE LOADS[1,2,3]

STOCK NO.	WOOD MEMBER		STEEL GAGE	DIMENSIONS (inches)						BOLT SCHEDULE						ALLOWABLE LOADS (lbf)			
	Beam Width (in)	Post Width (in)		W1	W2[4]	H1	H2	L		Beam				Post		Bearing[5,6]		Uplift[7,8]	
										KCC		KECC				C_D = 1.0		C_D = 1.6	
								KCC	KECC	Qty	Dia.	Qty	Dia.	Qty	Dia.	KCC	KECC	KCC	KECC
KCC325-4	3 1/8	3 1/2	7	3 1/4	3 5/8	6 1/2	8 1/2	11	7 1/2	4	5/8	2	5/8	2	5/8	21,485	14,650	3,505	1,750
KCC325-6	3 1/8	5 1/2	7	3 1/4	5 1/2	6 1/2	8 1/2	11	7 1/2	4	5/8	2	5/8	2	5/8	21,485	14,650	3,505	1,750
KCC44	3 1/2	3 1/2	7	3 5/8	3 5/8	4	8 1/2	7	5 1/2	2	5/8	1	5/8	2	5/8	15,315	12,030	3,920	1,960
KCC45	3 1/2	5 1/4	7	3 5/8	5 1/2	6 1/2	8 1/2	11	7 1/2	4	5/8	2	5/8	2	5/8	24,065	16,405	3,920	1960
KCC46	3 1/2	5 1/2	7	3 5/8	5 1/2	6 1/2	8 1/2	11	8 1/2	4	5/8	2	5/8	2	5/8	24,065	18,595	3,920	1,960
KCC47	3 1/2	7	7	3 5/8	7 1/8	6 1/2	8 1/2	11	9 1/2	4	5/8	2	5/8	2	5/8	24,065	20,780	3,920	1,960
KCC48	3 1/2	7 1/2	7	3 5/8	7 1/2	6 1/2	8 1/2	11	9 1/2	4	5/8	2	5/8	2	5/8	24,065	20,780	3,920	1,960
KCC525-4	5 1/8	3 1/2	3	5 1/4	3 5/8	8	8 1/2	13	9 1/2	4	3/4	2	3/4	2	3/4	41,640	30,430	8,155	6,050
KCC525-6	5 1/8	5 1/2	3	5 1/4	5 1/2	8	8 1/2	13	9 1/2	4	3/4	2	3/4	2	3/4	41,640	30,430	8,155	6,050
KCC525-8	5 1/8	7 1/2	3	5 1/4	7 1/2	8	8 1/2	13	9 1/2	4	3/4	2	3/4	2	3/4	41,640	30,430	8,155	6,050
KCC57	5 1/4	7	7	5 3/8	7 1/8	6 1/2	8 1/2	11	9 1/2	4	5/8	2	5/8	2	5/8	36,095	31,170	4,210	2,105
KCC64	5 1/2	3 1/2	7	5 1/2	3 5/8	6 1/2	8 1/2	11	7 1/2	4	5/8	2	5/8	2	5/8	37,815	25,780	4,210	2,105
KCC66	5 1/2	5 1/2	7	5 1/2	5 1/2	6 1/2	8 1/2	11	7 1/2	4	5/8	2	5/8	2	5/8	37,815	25,780	4,210	2,105
KCC68	5 1/2	7 1/2	7	5 1/2	7 1/2	6 1/2	8 1/2	11	9 1/2	4	5/8	2	5/8	2	5/8	37,815	32,655	4,210	2,105
KCC74	6 3/4	3 1/2	3	6 7/8	3 5/8	8	8 1/2	13	10 1/2	4	3/4	2	3/4	2	3/4	54,845	44,295	8,155	6,050
KCC75X	7	5 1/4	3	7 1/8	5 1/2	8	8 1/2	13	10 1/2	4	3/4	2	3/4	2	3/4	56,875	45,940	8,155	6,050
KCC76	6 3/4	5 1/2	3	6 7/8	5 1/2	8	8 1/2	13	10 1/2	4	3/4	2	3/4	2	3/4	54,845	44,295	8,155	6,050
KCC77	6 3/4	6 3/4	3	6 7/8	6 7/8	8	8 1/2	13	10 1/2	4	3/4	2	3/4	2	3/4	54,845	44,295	8,155	6,050
KCC77X	7	7	3	7 1/8	7 1/8	8	8 1/2	13	10 1/2	4	3/4	2	3/4	2	3/4	56,875	45,940	8,155	6,050
KCC78	6 3/4	7 1/2	3	6 7/8	7 1/2	8	8 1/2	13	10 1/2	4	3/4	2	3/4	2	3/4	54,845	44,295	8,155	6,050
KCC84	7 1/2	3 1/2	3	7 1/2	3 5/8	8	8 1/2	13	10 1/2	4	3/4	2	3/4	2	3/4	60,940	49,220	8,155	6,050
KCC86	7 1/2	5 1/2	3	7 1/2	5 1/2	8	8 1/2	13	10 1/2	4	3/4	2	3/4	2	3/4	60,940	49,220	8,155	6,050
KCC88	7 1/2	7 1/2	3	7 1/2	7 1/2	8	8 1/2	13	10 1/2	4	3/4	2	3/4	2	3/4	60,940	49,220	8,155	6,050
KCC94	8 3/4	3 1/2	3	8 7/8	3 5/8	8	8 1/2	13	10 1/2	4	3/4	2	3/4	2	3/4	71,095	57,420	8,155	6,050
KCC96	8 3/4	5 1/2	3	8 7/8	5 1/2	8	8 1/2	13	10 1/2	4	3/4	2	3/4	2	3/4	71,095	57,420	8,155	6,050
KCC98	8 3/4	7 1/2	3	8 7/8	7 1/2	8	8 1/2	13	10 1/2	4	3/4	2	3/4	2	3/4	71,095	57,420	8,155	6,050
KCC106	9 1/2	5 1/2	3	9 5/8	5 1/2	8	8 1/2	13	10 1/2	4	3/4	2	3/4	2	3/4	77,190	62,345	8,155	6,050

For **SI:** 1 inch = 25.4 mm, 1 lbf = 4.45 N, 1 psi = 6.895 kPa.

[1]Allowable loads have been adjusted for load duration factors, C_D, as shown, in accordance with the NDS. The allowable loads do not apply to loads of other durations, and are not permitted to be adjusted for other load durations. See Sections 4.1 and 4.2 for additional design and installation requirements.

[2]See Section 3.11.3 for required fastener dimensions and mechanical properties.

[3]Allowable loads shown are for installations in wood members complying with Section 3.11.2. Wood members must also have a minimum reference compression perpendicular to grain design value, $F_{c\text{-perp}}$, of 625 psi (4.31 MPa).

[4]Values indicate the required dimension of the post in the direction parallel to the long axis of the beam.

[5]Allowable bearing loads apply to conditions in which the underside of the beam and top of the post are in contact with the steel bearing surfaces of the column cap, and the beam is continuous over the length, *L*, of the column cap.

[6]Allowable bearing loads must be further reduced to account for stress limitations in the column (including axial loading and moment due to eccentricity), where such limitations govern.

[7]Allowable uplift loads for the KCC column caps do not apply to spliced beam configurations.

[8]Allowable uplift loads have been adjusted to account for geometry factors, C_Δ, of less than 1.0, due to end distance constraints for the bolts within the post.

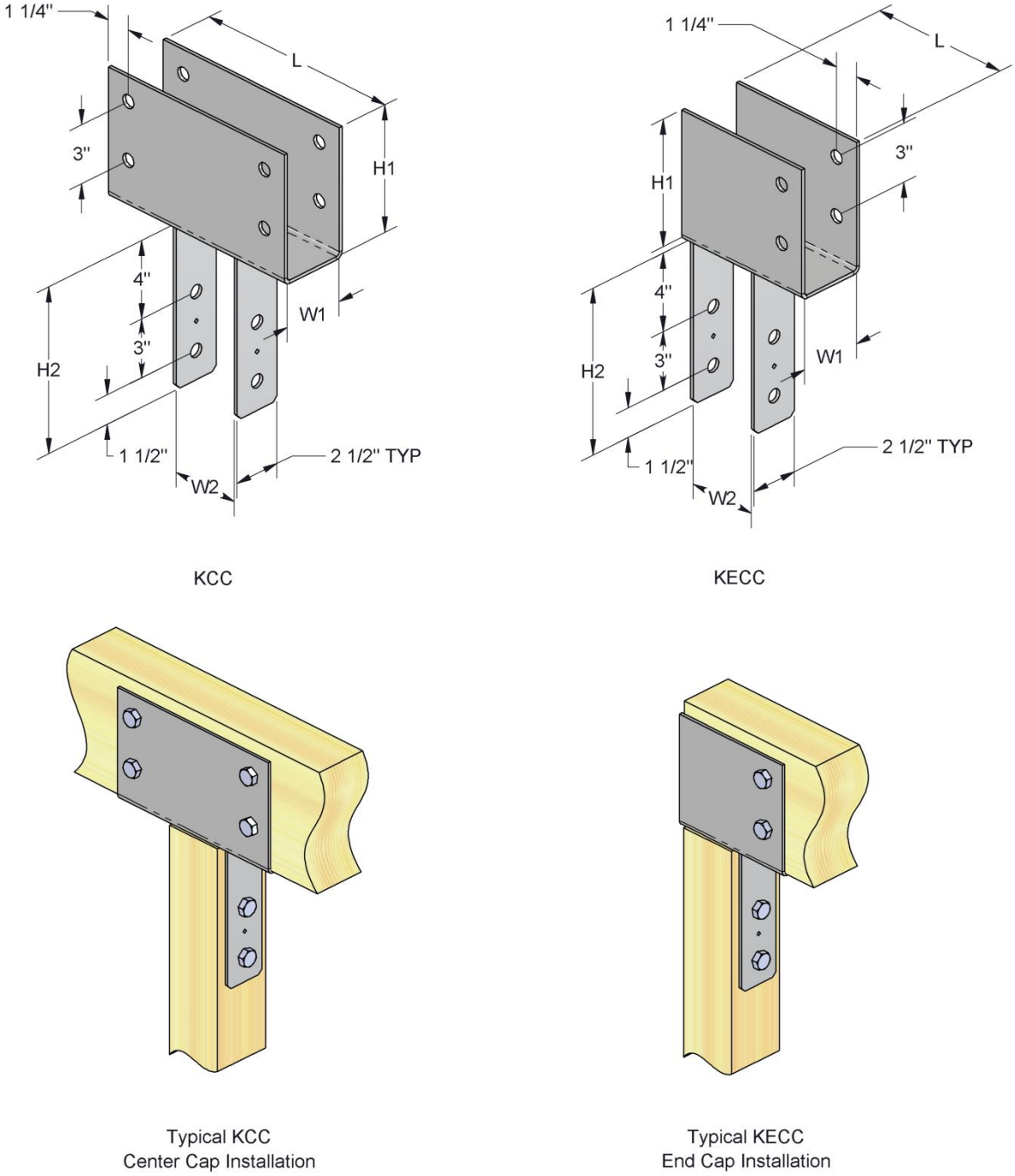

FIGURE 3—KCC AND KECC COLUMN CAPS

TABLE 4—KCCQ AND KECCQ COLUMN CAP ALLOWABLE LOADS[1,2,3]

STOCK NO.	WOOD MEMBERS		DIMENSIONS (inches)						NO. OF WS3 SCREWS		ALLOWABLE LOADS (lbf)			
	Beam Width	Post Size[4]	Steel Gauge	W1	W2[4]	H	L				Download[5,6]		Uplift[7]	
											C_D = 1.0		C_D = 1.6	
							KCCQ	KECCQ	Beam	Post	KCCQ	KECCQ	KCCQ	KECCQ
KCCQ325-4	3 1/8	3 1/2	7	3 1/4	3 5/8	6 1/2	11	7 1/2	16	14	21,485	14,650	7,065	6,860
KCCQ325-6	3 1/8	5 1/2	7	3 1/4	5 1/2	6 1/2	11	7 1/2	16	14	21,485	14,650	7,065	6,860
KCCQ44	3 1/2	3 1/2	7	3 5/8	3 5/8	6 1/2	11	8 1/2	16	14	24,065	16,965	7,065	6,860
KCCQ45	3 1/2	5 1/2	7	3 5/8	5 1/2	6 1/2	11	7 1/2	16	14	24,065	16,405	7,065	6,860
KCCQ46	3 1/2	5 1/2	7	3 5/8	5 1/2	6 1/2	11	8 1/2	16	14	24,065	18,595	7,065	6,860
KCCQ47	3 1/2	7	7	3 5/8	7 1/8	6 1/2	11	9 1/2	16	14	24,065	20,780	7,065	6,860
KCCQ47X	3 1/2	7	3	3 5/8	7 1/8	8	13	9 1/2	16	14	28,440	20,780	7,065	6,860
KCCQ48	3 1/2	7 1/2	7	3 5/8	7 1/2	6 1/2	11	8 1/2	16	14	24,065	18,595	7,065	6,860
KCCQ525-4	5 1/8	3 1/2	3	5 1/4	3 5/8	8	13	9 1/2	16	14	41,640	22,330	7,065	6,860
KCCQ525-6	5 1/8	5 1/2	3	5 1/4	5 1/2	8	13	9 1/2	16	14	41,640	27,300	7,065	6,860
KCCQ525-8	5 1/8	7 1/2	3	5 1/4	7 1/2	8	13	9 1/2	16	14	41,640	30,430	7,065	6,860
KCCQ57	5 1/4	7	7	5 3/8	7 1/8	6 1/2	11	9 1/2	16	14	36,095	31,170	7,065	6,860
KCCQ64	5 1/2	3 1/2	7	5 1/2	3 5/8	6 1/2	11	8 1/2	16	14	37,815	23,535	7,065	6,860
KCCQ66	5 1/2	5 1/2	7	5 1/2	5 1/2	6 1/2	11	8 1/2	16	14	37,815	28,910	7,065	6,860
KCCQ67X	5 1/2	7	7	5 1/2	7 1/8	6 1/2	11	8 1/2	16	14	37,815	29,220	7,065	6,860
KCCQ68	5 1/2	7 1/2	7	5 1/2	7 1/2	6 1/2	11	8 1/2	16	14	37,815	29,220	7,065	6,860
KCCQ71-4	7	3 1/2	3	7 1/8	3 5/8	6 1/2	11	8 1/2	16	14	48,125	28,240	7,065	6,860
KCCQ71-6	7	5 1/2	3	7 1/8	5 1/2	6 1/2	11	8 1/2	16	14	48,125	35,285	7,065	6,860
KCCQ71-71	7	7	3	7 1/8	7 1/8	6 1/2	11	8 1/2	16	14	48,125	37,190	7,065	6,860
KCCQ71-8	7	7 1/2	3	7 1/8	7 1/2	6 1/2	11	8 1/2	16	14	48,125	37,190	7,065	6,860
KCCQ74	6 3/4	3 1/2	3	6 7/8	3 5/8	6 1/2	11	8 1/2	16	14	46,405	27,465	7,065	6,860
KCCQ76	6 3/4	6 1/2	3	6 7/8	5 1/2	6 1/2	11	8 1/2	16	14	46,405	35,860	7,065	6,860
KCCQ77	6 3/4	6 3/4	3	6 7/8	6 7/8	6 1/2	11	8 1/2	16	14	46,405	35,860	7,065	6,860
KCCQ78	6 3/4	7 1/2	3	6 7/8	7 1/2	6 1/2	11	8 1/2	16	14	46,405	35,860	7,065	6,860
KCCQ84	7 1/2	3 1/2	7	7 1/2	3 5/8	6 1/2	11	8 1/2	16	14	51,565	29,785	7,065	6,860
KCCQ86	7 1/2	5 1/2	7	7 1/2	5 1/2	6 1/2	11	8 1/2	16	14	51,565	37,390	7,065	6,860
KCCQ88	7 1/2	7 1/2	7	7 1/2	7 1/2	6 1/2	11	8 1/2	16	14	51,565	39,845	7,065	6,860
KCCQ94	8 3/4	3 1/2	7	8 7/8	3 5/8	6 1/2	11	8 1/2	16	14	60,155	33,595	7,065	6,860
KCCQ96	8 3/4	5 1/2	7	8 7/8	5 1/2	6 1/2	11	8 1/2	16	14	60,155	42,630	7,065	6,860
KCCQ98	8 3/4	7 1/2	7	8 7/8	7 1/2	6 1/2	11	8 1/2	16	14	60,155	46,485	7,065	6,860
KCCQ106	9 1/2	5 1/2	7	9 1/2	5 1/2	6 1/2	11	8 1/2	16	14	65,315	45,760	7,065	6,860

For **SI:** 1 inch = 25.4 mm, 1 lbf = 4.45 N, 1 psi = 6.89 kPa.

[1]Allowable loads have been adjusted for load duration factors, C_D, as shown, in accordance with the NDS. The allowable loads do not apply to loads of other durations, and are not permitted to be adjusted for other load durations. See Sections 4.1 and 4.2 for additional design and installation requirements.
[2]See Section 3.11.3 for required fastener dimensions and mechanical properties.
[3]Allowable loads shown are for installations in wood members complying with Section 3.11.2 Wood members must also have a minimum reference compression perpendicular to grain design value, $F_{c\text{-}perp}$, of 625 psi (4.31 MPa).
[4]Values indicate the required dimension of the post in the direction parallel to the long axis of the beam.
[5]Allowable downloads apply to conditions in which the underside of the beam and the top of the post are in contact with the steel bearing surfaces of the column cap, and the beam is continuous over the length, L, of the column cap.
[6]Allowable downloads must be further reduced to account for stress limitations in the column (including axial loading and moment due to eccentricity), where such limitations govern.
[7]Allowable uplift loads for the KCCQ column caps do not apply to spliced beam configurations.

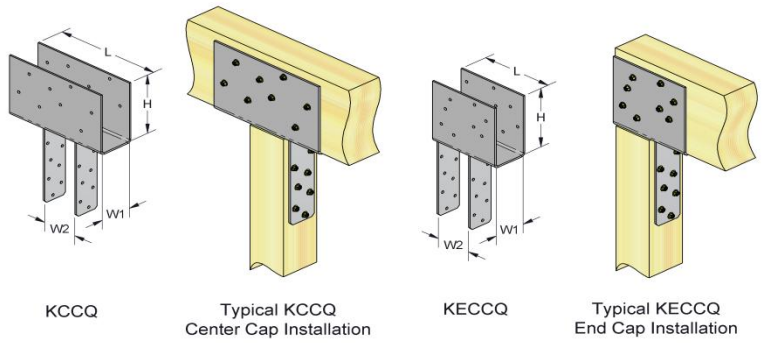

FIGURE 4—KCCQ AND KECCQ COLUMN CAPS

TABLE 5—PA POST ANCHOR ALLOWABLE LOADS[1,2,3,4,5]

STOCK NO.	STEEL GAGE		DIMENSIONS (inches)			FASTENER SCHEDULE				ALLOWABLE LOADS (lbf)	
	Base	Stand-off Plate	W	L	H	Anchor Bolt (in.)		Post		Bearing	Uplift
						Qty.	Type	Qty.	Type	C_D = 1.0	C_D = 1.6
PA44	18	12	$3^{9}/_{16}$	$3^{1}/_{2}$	$2^{1}/_{8}$	1	$^{1}/_{2}$	8	16d Common	4,155	455
PA44R	18	12	$4^{1}/_{16}$	4	$3^{1}/_{2}$	1	$^{1}/_{2}$	12	16d Common	4,155	455
PA46	18	12	$3^{9}/_{16}$	$5^{1}/_{2}$	$3^{1}/_{2}$	1	$^{1}/_{2}$	14	16d Common	4,155	455
PA46R	18	10	$4^{1}/_{16}$	6	$3^{1}/_{2}$	1	$^{1}/_{2}$	14	16d Common	4,155	455
PA66	18	12	$5^{9}/_{16}$	$5^{1}/_{2}$	$3^{1}/_{2}$	1	$^{1}/_{2}$	16	16d Common	5,930	250
PA66R	18	12	$6^{1}/_{16}$	$6^{1}/_{16}$	$3^{1}/_{4}$	1	$^{1}/_{2}$	16	16d Common	5,930	250
PA44E	18	16	$3^{9}/_{16}$	$3^{1}/_{2}$	$3^{1}/_{2}$	1	$^{1}/_{2}$	6	16d Common	6,775	1,035
PA46E	18	12	$3^{9}/_{16}$	$5^{1}/_{2}$	$3^{1}/_{2}$	1	$^{5}/_{8}$	8	16d Common	6,775	1,035
PA66E	14	12	$5^{1}/_{2}$	$5^{1}/_{2}$	$3^{1}/_{2}$	1	$^{5}/_{8}$	8	16d Common	16,005	1,130
PA66ER-TZ	14	12	6	$5^{1}/_{2}$	$3^{1}/_{4}$	1	$^{5}/_{8}$	8	16d Common	16,005	1,130

For **SI:** 1 inch = 25.4 mm, 1 lbf = 4.45 N.

[1]Allowable loads have been adjusted for load duration factors, C_D, as shown, in accordance with the NDS. The allowable loads do not apply to loads of other durations, and are not permitted to be adjusted for other load durations. See Sections 4.1 and 4.2 for additional design and installation requirements.
[2]See Section 3.11.3 for required fastener dimensions and mechanical properties.
[3]Allowable loads shown are for installations in wood members complying with Section 3.11.2.
[4]Allowable loads shown do not apply to the anchorage to concrete or masonry. Anchorage to concrete or masonry must be designed by a registered design professional in accordance with Section 4.1 of this report.
[5]The PA Post Anchor has no moment or lateral capacity and should not be used in fixed post applications.

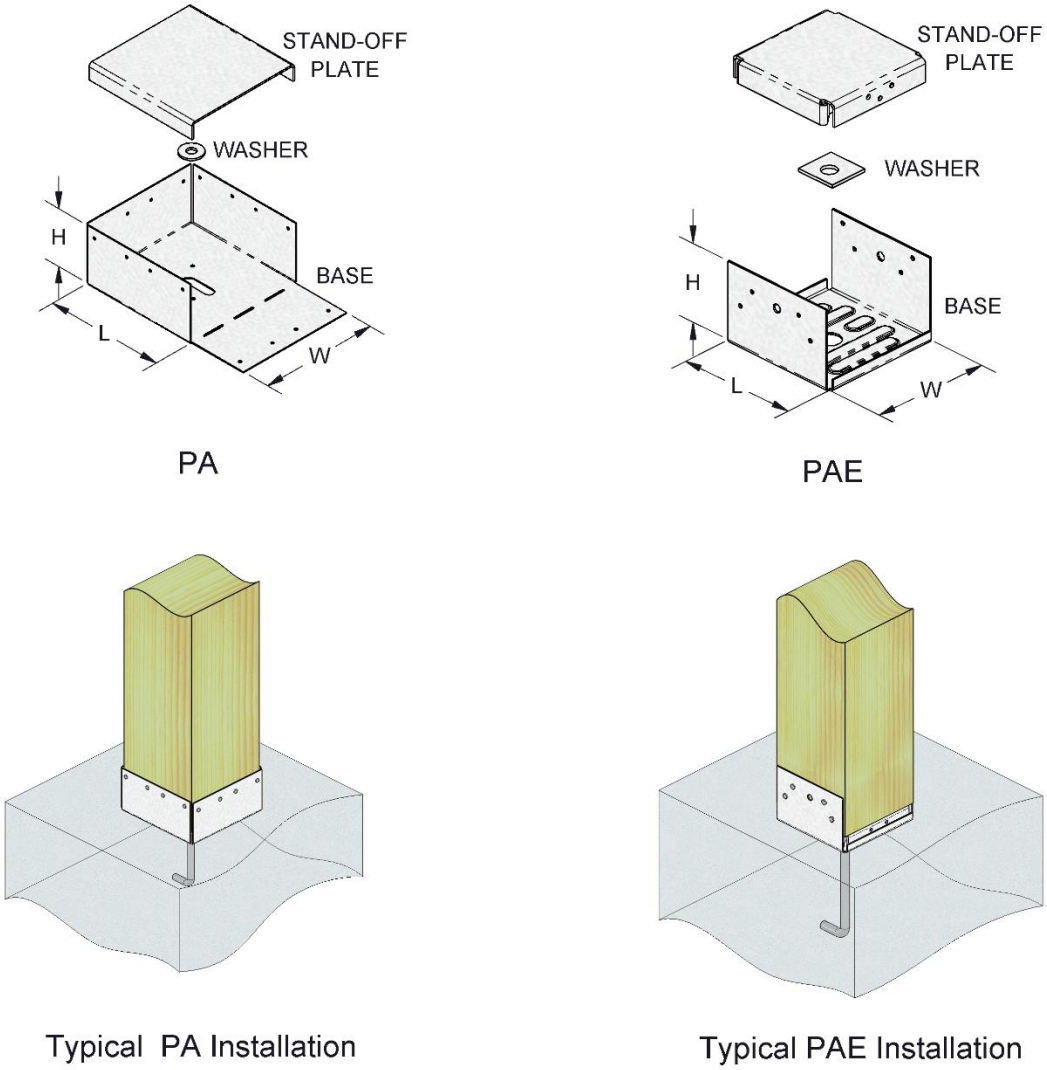

FIGURE 5—PA POST ANCHOR

TABLE 6—PAF POST ANCHOR ALLOWABLE LOADS[1,2,3,4,5,6]

STOCK NO.	STEEL GA.	DIMENSIONS			FASTENER SCHEDULE				ALLOWABLE LOADS (lbf)	
		W	H	L	Anchor Bolt		Post		Download	Uplift
		(in.)	(in.)	(in.)	Qty	Size (in.)	Qty	Type	C_D = 1.0	C_D = 1.60
PAF44	14	$3^{11}/_{16}$	$2^{11}/_{16}$	$3^{5}/_{16}$	1	$^{1}/_{2}$	8	10d Common	7245	810
PAF46	14	$3^{11}/_{16}$	$3^{1}/_{4}$	$4^{15}/_{16}$	1	$^{5}/_{8}$	8	10d Common	8490	1365
								16d Common	8835	
PAF66	14	$5^{11}/_{16}$	$3^{1}/_{4}$	$4^{15}/_{16}$	1	$^{5}/_{8}$	8	10d Common	10870	1375
								16d Common	12040	

For **SI**: 1 inch = 25.4 mm, 1 lbf = 4.45 N.

[1]Allowable loads have been adjusted for load duration factors, C_D, as shown, in accordance with the NDS. The allowable loads do not apply to loads of other durations, and are not permitted to be adjusted for other load durations. See Sections 4.1 and 4.2 for additional design and installation requirements.
[2]See Section 3.11.3 for required fastener dimensions and mechanical properties.
[3]Allowable loads shown are for installations in wood members complying with Section 3.11.2.
[4]The PAF device is anchored to the concrete or masonry surface with the specified diameter anchor bolt listed with a cut washer (furnished by others).
[5]Allowable loads shown do not apply to the anchorage to concrete or masonry. Anchorage to concrete or masonry must be designed by a registered design professional in accordance with Section 4.1 of this report.
[6]The PAF Post Anchor has no moment or lateral capacity and should not be used in fixed post applications.

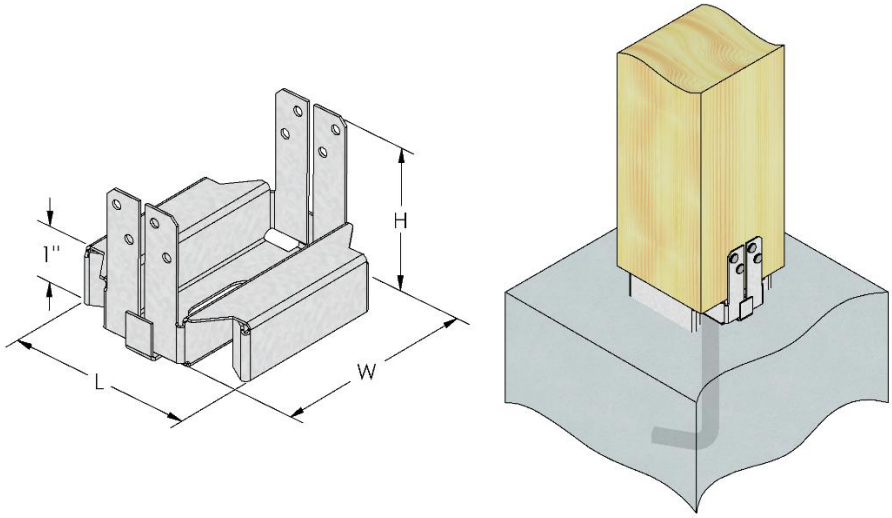

FIGURE 6—PAF POST ANCHOR

TABLE 7—PAU POST ANCHOR[1,2,3,4,5,6]

STOCK NO.	STEEL GAGE			Dimensions (in.)			FASTENER SCHEDULE						ALLOWABLE LOADS (lbf)		
	Base	Stand-Off Plate	Washer	W	H	L	Nails (in.)		Bolts (in.)		Anchor Bolts		Bearing	Uplift	
							Qty	Type	Qty	Size	Qty	Size	100%	Nails $C_D = 1.6$	Bolts $C_D = 1.6$
PAU44	12	16	10	$3^9/_{16}$	$5^7/_{16}$	3	12	16d Common	2	$^1/_2$	1	$^5/_8$	6,775	2,535	2,265
PAU46	10	12	10	$3^9/_{16}$	6	5	12	16d Common	2	$^1/_2$	1	$^5/_8$	13,815	2,535	2,265
PAU66	10	12	10	$5^1/_2$	6	5	12	16d Common	2	$^1/_2$	1	$^5/_8$	16,005	2,455	2,265
PAU66R	10	12	10	$6^1/_{16}$	$5^3/_4$	5	12	16d Common	2	$^1/_2$	1	$^5/_8$	16,005	1,475	1,475
PAU88	12	12	3	$7^1/_2$	$7^3/_{16}$	$7^1/_{16}$	14	16d Common	--	--	2	$^5/_8$	24,900	3,315	--
PAU88R	12	12	3	$8^1/_{16}$	$6^{15}/_{16}$	$7^1/_{16}$	14	16d Common	--	--	2	$^5/_8$	24,900	3,315	--
PAU1010	12	16	10	$9^1/_2$	$7^3/_{16}$	$9^1/_2$	14	16d Common	2	$^5/_8$	2	$^5/_8$	27,095	1,495	1,495
PAU1010R	12	16	10	$10^1/_{16}$	$7^3/_{16}$	10	14	16d Common	2	$^5/_8$	2	$^5/_8$	27,095	1,495	1,495
PAU1212	12	12	10	$11^1/_2$	$6^7/_8$	$11^1/_2$	18	16d Common	2	$^5/_8$	2	$^5/_8$	64,015	1,180	1,180
PAU1212R	12	12	10	$12^1/_8$	$6^7/_8$	$12^1/_8$	18	16d Common	2	$^5/_8$	2	$^5/_8$	64,015	1,180	1,180

For **SI:** 1 inch = 25.4 mm, 1 lbf = 4.45 N.

[1]Allowable loads have been adjusted for load duration factors, C_D, as shown, in accordance with the NDS. The allowable loads do not apply to loads of other durations, and are not permitted to be adjusted for other load durations. See Sections 4.1 and 4.2 for additional design and installation requirements.
[2]See Section 3.11.3 or required fastener dimensions and mechanical properties.
[3]Allowable loads shown are for installations in wood members complying with Section 3.11.2. Values apply only to parallel-to-grain loading of wood members.
[4]Allowable loads shown do not apply to the anchorage to concrete or masonry. Anchorage to concrete or masonry must be designed by a registered design professional in accordance with Section 4.1 of this report.
[5]The PAU Post Anchor has no moment or lateral capacity and should not be used in fixed post applications.
[6]Allowable nail loads and bolt loads are not permitted to be added together.

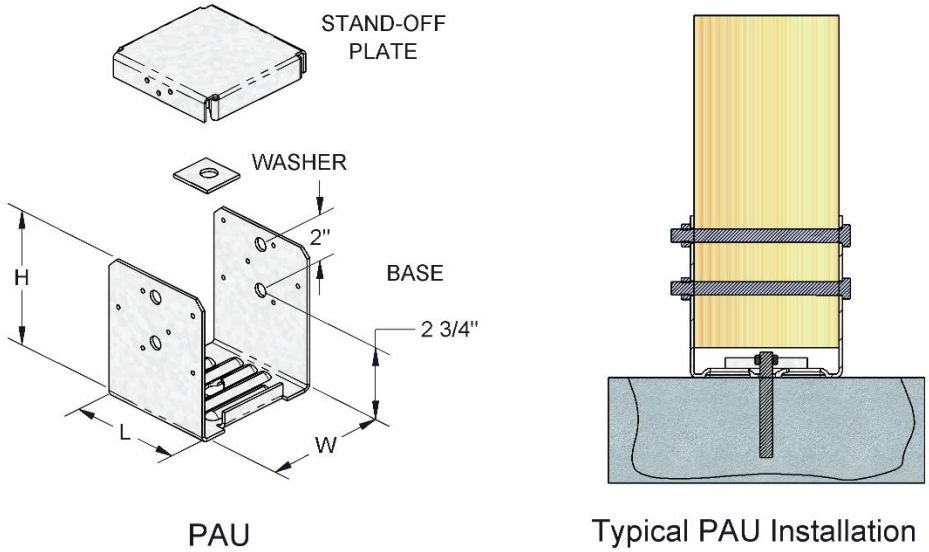

FIGURE 7—PAU POST ANCHOR

TABLE 8—PB, PBES AND PBS POST CAP ALLOWABLE LOADS[1,2,3,4,5]

STOCK NO.	STEEL GAGE	DIMENSIONS (in.)					FASTENER SCHEDULE				ALLOWABLE LOADS (lbf)		
							Qty			Type	Uplift	F1	F2
							Post		Beam				
		W1	H1	H2	L1	L2	P_W	P_L	B_L		$C_D = 1.6$	$C_D = 1.6$	$C_D = 1.6$
PB44-6	18	$1^1/_2$	$2^1/_8$	$1^1/_2$	$3^5/_8$	$3^5/_8$	8	0	8	16d Common	585	1,760	1,015
PB66-6	18	$1^1/_2$	$2^1/_2$	3	$5^9/_{16}$	$5^9/_{16}$	8	0	8	16d Common	585	1,760	1,015
PBS44	18	$1^7/_{16}$	$2^5/_{16}$	$2^{13}/_{16}$	$3^9/_{16}$	$6^1/_2$	8	4	12	16d Common	2,650	1,860	1,110
PBS44R	18	$1^1/_2$	$2^5/_{16}$	$2^3/_{16}$	4	7	4	4	8	16d Common	1,765	920	810
PBS66	18	$1^1/_4$	$2^5/_{16}$	$2^7/_8$	$5^1/_2$	8	8	6	12	16d Common	2,015	1,865	1,300
PBS66R	18	$1^1/_4$	$2^5/_{16}$	$2^3/_{16}$	6	$8^1/_2$	4	6	10	16d Common	1,670	1,190	1,235
PBES44	18	$1^1/_2$	$2^3/_8$	$2^3/_4$	$3^1/_4$	$4^3/_4$	4	4	8	16d Common	1,765	920	810
PBES66	18	$1^1/_2$	$2^3/_8$	$2^1/_8$	$5^1/_2$	7	4	4	8	16d Common	1,670	1,190	1,235

For **SI:** 1 inch = 25.4 mm, 1 lbf = 4.45 N.

[1]Allowable loads have been adjusted for a load factor, C_D, of 1.6, corresponding to a ten-minute load duration (i.e., wind or earthquake loading), in accordance with the NDS. The allowable loads do not apply to loads of other durations. See Section 4.1 and 4.2 for additional design and installation requirements.
[2]See Section 3.11.3 for required fastener dimensions and mechanical properties.
[3]Allowable loads shown are for installations in wood members complying with Section 3.11.2.
[4] "F1" loads are parallel to the major axis of the beam, and "F2" loads are perpendicular to the major axis of the beam.
[5] PB, PBES, and PBS post caps must be installed in pairs, as illustrated in the following figure. Required fastener schedules and tabulated allowable loads are per pair of connectors.

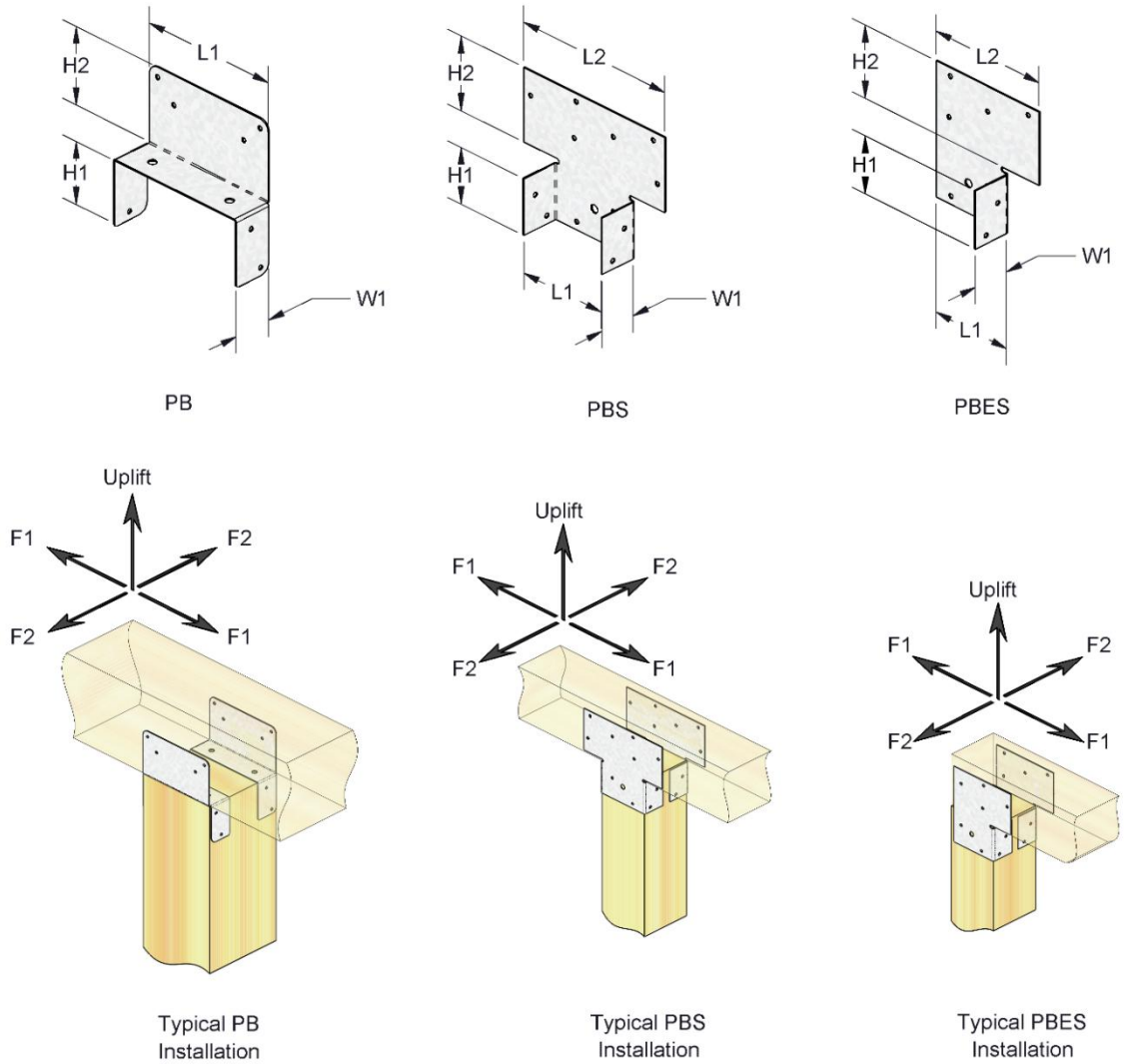

FIGURE 8—PB, PBES AND PBS POST CAP

TABLE 9—PCM AND EPCM POST CAP ALLOWABLE LOADS[1,2,3,4]

STOCK NO.	STEEL GAGE	DIMENSIONS (in.)							FASTENER SCHEDULE				PCM ALLOWABLE LOADS (lbf)			EPCM ALLOWABLE LOADS (lbf)		
		W_1	W_2	L_1	L_2	L_3	H_1	H_2	Qty Post	Qty Beam PCM	Qty Beam EPCM	Type	Uplift	F1	F2	Uplift	F1	F2
													$C_D = 1.6$	$C_D = 1.6$	$C_D = 1.6$	$C_D = 1.6$	$C_D = 1.6$	$C_D = 1.6$
PCM4416	16	3 9/16	3 9/16	2 7/16	11	7 1/4	3 9/16	3 3/4	8	12	8	16d Com.	970	1,115	1,335	970	1,115	1,335
PCM4516	16	3 9/16	5 5/16	2 7/16	12 3/4	9	3 9/16	3 3/4	8	12	8	16d Com.	970	1,115	1,335	970	1,115	1,335
PCM4616	16	3 9/16	5 9/16	2 7/16	13	9 1/4	3 9/16	3 3/4	8	12	8	16d Com.	970	1,115	1,335	970	1,115	1,335
PCM4716	16	3 9/16	7 1/8	2 7/16	14 9/16	10 13/16	3 9/16	3 3/4	8	12	8	16d Com.	970	1,115	1,335	970	1,115	1,335
PCM4816	16	3 9/16	7 9/16	2 7/16	15	11 1/4	3 9/16	3 3/4	8	12	8	16d Com.	970	1,115	1,335	970	1,115	1,335
PCM5416	16	5 9/16	3 9/16	3 13/16	11	7 1/4	3 5/8	3 3/4	8	12	8	16d Com.	970	1,115	1,335	970	1,115	1,335
PCM5516	16	5 9/16	5 9/16	3 13/16	12 3/4	9	3 5/8	3 3/4	8	12	8	16d Com.	970	1,115	1,335	970	1,115	1,335
PCM6416	16	5 1/2	3 9/16	3 13/16	11	7 1/4	3 1/2	3 3/4	8	12	8	16d Com.	950	1,545	1,675	950	1,545	1,675
PCM6616	16	5 1/2	5 9/16	3 13/16	13	9 1/4	3 1/2	3 3/4	8	12	8	16d Com.	950	1,545	1,675	950	1,545	1,675
PCM6816	16	5 1/2	7 9/16	3 13/16	15	11 1/4	3 1/2	3 3/4	8	12	8	16d Com.	950	1,545	1,675	950	1,545	1,675
PCM8416	16	7 1/2	3 9/16	5 5/8	11	7 1/4	3 1/2	3 3/4	8	12	8	16d Com.	950	1,545	1,675	950	1,545	1,675
PCM8616	16	7 1/2	5 9/16	5 5/8	13	9 1/4	3 3/8	3 3/4	8	12	8	16d Com.	950	1,545	1,675	950	1,545	1,675
PCM8816	16	7 1/2	7 9/16	5 5/8	15	11 1/4	3 1/2	3 3/4	8	12	8	16d Com.	950	1,545	1,675	950	1,545	1,675
PCM44	12	3 9/16	3 9/16	2 7/16	11	7 1/4	3 9/16	3 3/4	8	12	8	16d Com.	1,665	1,350	1,890	1,665	1,350	1,890
PCM46	12	3 9/16	5 9/16	2 7/16	13	9 1/4	3 9/16	3 3/4	8	12	8	16d Com.	1,665	1,350	1,890	1,665	1,350	1,890
PCM48	12	3 9/16	7 9/16	2 7/16	15	11 1/4	3 9/16	3 3/4	8	12	8	16d Com.	1,665	1,350	1,890	1,665	1,350	1,890
PCM64	12	5 1/2	3 9/16	3 13/16	11	7 1/4	3 1/2	3 3/4	8	12	8	16d Com.	1,500	1,875	1,915	1,500	1,875	1,915
PCM66	12	5 1/2	5 9/16	3 13/16	13	9 1/4	3 1/2	3 3/4	8	12	8	16d Com.	1,500	1,875	1,915	1,500	1,875	1,915
PCM68	12	5 1/2	7 9/16	3 13/16	15	11 1/4	3 1/2	3 3/4	8	12	8	16d Com.	1,500	1,875	1,915	1,500	1,875	1,915
PCM75	12	7 1/8	5 5/16	5 5/8	12 3/4	10	3 11/16	3 3/4	8	12	8	16d Com.	1,500	1,875	1,915	1,500	1,875	1,915
PCM77	12	7 1/8	7 1/8	5 5/8	14 9/16	10 13/16	3 11/16	3 3/4	8	12	8	16d Com.	1,500	1,875	1,915	1,500	1,875	1,915
PCM84	12	7 1/2	3 9/16	5 5/8	11	7 1/4	3 1/2	3 3/4	8	12	8	16d Com.	1,500	1,875	1,915	1,500	1,875	1,915
PCM86	12	7 1/2	5 9/16	5 5/8	13	9 1/4	3 1/2	3 3/4	8	12	8	16d Com.	1,500	1,875	1,915	1,500	1,875	1,915
PCM88	12	7 1/2	7 9/16	5 5/8	15	11 1/4	3 1/2	3 3/4	8	12	8	16d Com.	1,500	1,875	1,915	1,500	1,875	1,915

For **SI:** 1 inch = 25.4 mm, 1 lbf = 4.45 N.

[1]Allowable loads have been adjusted for a load factor, C_D, of 1.6, corresponding to a ten-minute load duration (i.e., wind or earthquake loading), in accordance with the NDS. The allowable loads do not apply to loads of other durations. See Sections 4.1 and 4.2 for additional design and installations requirements.

[2]See Section 3.11.3 for required fastener dimensions and mechanical properties.

[3]Allowable loads shown are for installations in wood members complying with Section 3.11.2.

[4]"F1" loads are parallel to the major axis of the beam, and "F2" loads are perpendicular to the major axis of the beam.

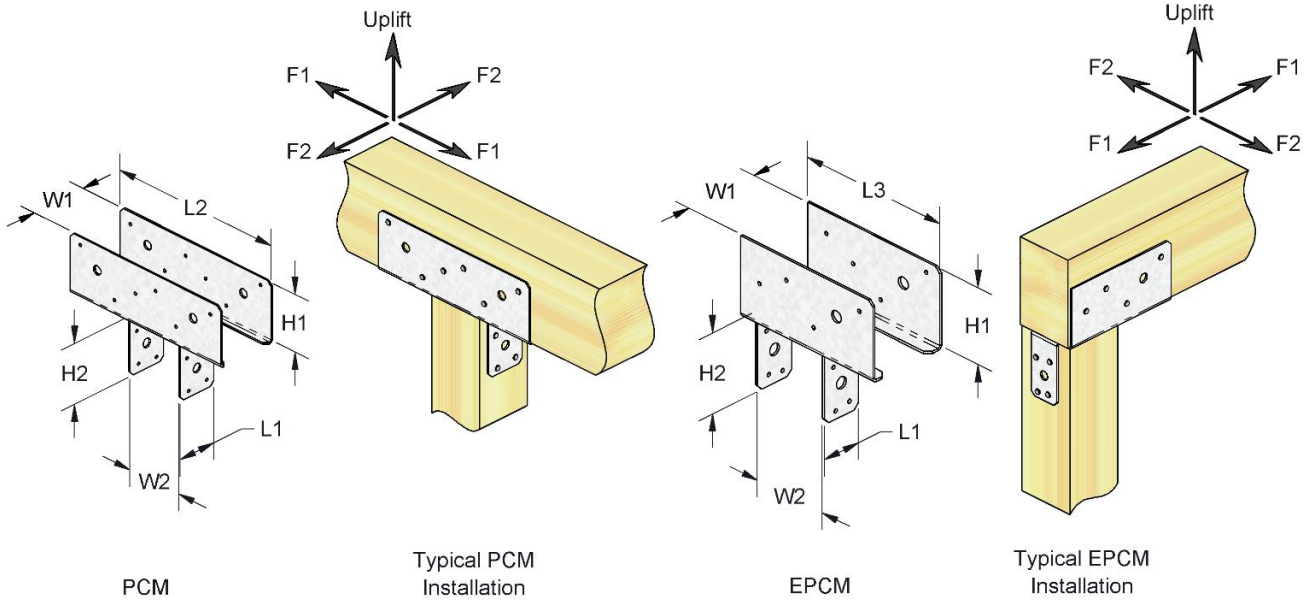

FIGURE 9—PCM AND EPCM POST CAPS

TABLE 10—PBC POST BEAM CORNER CONNECTOR ALLOWABLE LOADS[1,2,3]

STOCK NO.	STEEL GA.	DIMENSION (in.)		FASTENER SCHEDULE			ALLOWABLE LOADS (lbf)		
		W	L	Qty		Type[2]	Uplift	F1	F2
				Post	Beam		160%	160%	160%
PBC44	18	$4^{15}/_{16}$	$6^{1}/_{2}$	8	8	16d Common	1,765	1,520	1,520
PBC66	18	$6^{15}/_{16}$	$6^{1}/_{2}$	8	8	16d Common	1,765	1,520	1,520

For **SI:** 1 inch = 25.4 mm, 1 lbf = 4.45 N.

[1]Allowable loads have been adjusted for a load factor, C_D, of 1.6, corresponding to a ten-minute load duration (i.e., wind or earthquake loading), in accordance with the NDS. The allowable loads do not apply to loads of other durations. See Sections 4.1 and 4.2 for additional design and installations requirements.
[2]See Section 3.11.3 for required fastener dimensions and mechanical properties.
[3]Allowable loads shown are for installations in wood members complying with Section 3.11.2.

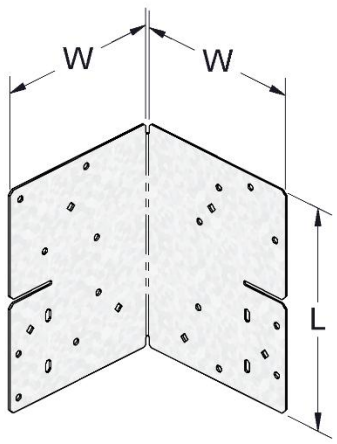

PBC

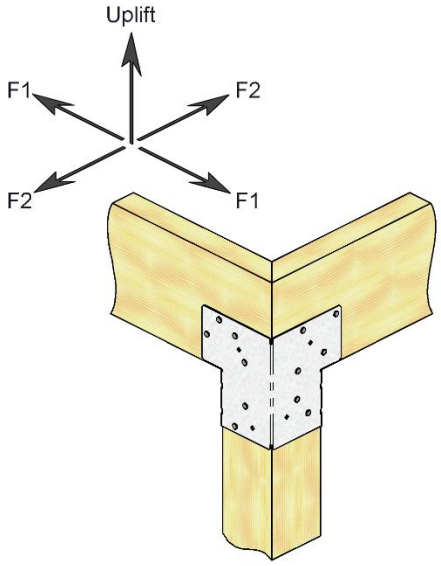

Typical PBC Installation

FIGURE 10—PBC POST BEAM CONRNER CONNECTORS

TABLE 11—STEEL TYPE, GRADE AND CORROSION RESISTANCE

PRODUCT	STEEL	COATING
C Post Cap	No. 18 Ga. Material: ASTM A653, SS designation, Grade 40	G90[1], G185[1]
D Post Anchor	No. 18 Ga. Material: ASTM A653, SS designation, Grade 40	G90[1], G185[1]
KCC and KECC Column Caps	No. 7 Ga. Material: ASTM A1011, SS designation, Grade 40 No. 3 Ga. Material: ASTM A36	Painted
KCCQ / KECCQ Column Cap	No. 3 Ga. Material: ASTM A36 No. 7 Ga. Material: ASTM A 1011, SS designation, Grade 40	Painted
PA Post Anchor	No. 18 Ga. Material: ASTM A653, SS designation, Grade 40	G90[1], G185[1]
PAF Post Anchor	No. 14 Ga. Material: ASTM A653, SS designation, Grade 40	G185[1]
PAU Post Anchor	Nos. 10, 12, 16 Ga. Material: ASTM A653, SS designation, Grade 40 Nos. 3, 10 Ga. Material: ASTM A36	G90[1], G185[1] Painted
PB, PBES and PBS Post Caps	No. 18 Ga. Material: ASTM A653, SS designation, Grade 40	G90[1], G185[1]
PCM, EPCM Post Cap	Nos. 12 and 16 Ga. Material: ASTM A653, SS designation, Grade 40	G90[1], G185[1]
PBC Post Beam Corner Connector	No. 18 Ga. Material: ASTM A653, SS designation, Grade 40	G90[1], G185[1]

[1]Corrosion protection is a zinc coating in accordance with ASTM A653.

TABLE 12—CROSS-REFERENCE OF PRODUCT NAMES WITH APPLICABLE REPORT SECTIONS, TABLES AND FIGURES

PRODUCT NAME	REPORT SECTION	TABLE NO.	FIGURE NO.
C Post Cap	3.1	1	1
D Post Anchor	3.2	2	2
EPCM Post Cap	3.9	9	9
KCC Column Cap	3.3	3	3
KECC Column Cap	3.3	3	3
KCCQ Column Cap	3.4	4	4
KECCQ Column Cap	3.4	4	4
PA Post Anchor	3.5	5	5
PAF Post Anchor	3.6	6	6
PAU Post Anchor	3.7	7	7
PB, PBES and PBS Post Caps	3.8	8	8
PCM, EPCM Post Cap	3.9	9	9
PBC Post Beam Corner Connector	3.10	10	10

DIVISION: 06 00 00—WOOD, PLASTICS AND COMPOSITES
Section: 06 05 23—Wood, Plastic, and Composite Fastenings

REPORT HOLDER:

MITEK® INC.

EVALUATION SUBJECT:

MITEK® CAPS AND BASES FOR WOOD-FRAMED CONSTRUCTION

1.0 REPORT PURPOSE AND SCOPE

Purpose:

The purpose of this evaluation report supplement is to indicate that MiTek® caps and bases for wood-framed construction, described in ICC-ES evaluation report ESR-3449, have also been evaluated for compliance with the codes noted below as adopted by the Los Angeles Department of Building and Safety (LADBS).

Applicable code editions:

- 2026 *City of Los Angeles Building Code* (LABC)
- 2026 *City of Los Angeles Residential Code* (LARC)

2.0 CONCLUSIONS

The MiTek® caps and bases for wood-framed construction, described in Sections 2.0 through 7.0 of the evaluation report ESR-3449, comply with the LABC Chapter 23, and the LARC, and are subjected to the conditions of use described in this supplement.

3.0 CONDITIONS OF USE

The MiTek® caps and bases for wood-framed construction, described in this evaluation report supplement must comply with all of the following conditions:

- All applicable sections in the evaluation report ESR-3449.
- The design, installation, conditions of use and labeling are in accordance with the 2024 *International Building Code*® (IBC) or 2024 *International Residential Code*® (IRC) provisions, as applicable, noted in the evaluation report ESR-3449.
- The design, installation and inspection are in accordance with additional requirements of LABC Chapters 16 and 17, as applicable.
- The connections are not approved to resist uplift forces from wood shear walls.
- Allowable loads must be reduced when load durations with lower value C_d (than what is in the tables) govern.
- Under the LARC, an engineered design in accordance with LARC Section R301.1.3 must be submitted.
- The hillside building provisions in LABC Section 2301.1 are excluded from this supplement.

This supplement expires concurrently with the evaluation report ESR-3449, reissued October 2025 and revised August 2026.

ICC-ES Evaluation Reports are not to be construed as representing aesthetics or any other attributes not specifically addressed, nor are they to be construed as an endorsement of the subject of the report or a recommendation for its use. There is no warranty by ICC Evaluation Service, LLC, express or implied, as to any finding or other matter in this report, or as to any product covered by the report.

Copyright © 2026 ICC Evaluation Service, LLC. All rights reserved.

DIVISION: 06 00 00—WOOD, PLASTICS AND COMPOSITES
Section: 06 05 23—Wood, Plastics, and Composite Fastenings

REPORT HOLDER:

MITEK® INC.

EVALUATION SUBJECT:

MITEK® CAPS AND BASES FOR WOOD-FRAMED CONSTRUCTION

1.0 REPORT PURPOSE AND SCOPE

Purpose:

The purpose of this evaluation report supplement is to indicate that MiTek caps and bases for wood-framed construction, described in ICC-ES evaluation report ESR-3449, have also been evaluated for compliance with the code*(s)* noted below.

Applicable code edition*(s)*:

- *2025 and 2022 California Building Code* (CBC)

For evaluation of applicable Chapters adopted by the California Office of Statewide Health Planning and Development (OSHPD) AKA: California Department of Health Care Access and Information (HCAI) and the Division of State Architect (DSA), see Sections 2.1.1 and 2.1.2 below.

- *2025 and 2022 California Residential Code* (CRC)

2.0 CONCLUSIONS

2.1 CBC:

The MiTek caps and bases for wood-framed construction, described in Sections 2.0 through 7.0 of the evaluation report ESR-3449, comply with CBC Chapter 23, provided the design and installation are in accordance with the 2024 and 2021 *International Building Code®* (IBC) provisions noted in the evaluation report and the additional requirements of CBC Chapter 16, 17 and 23, as applicable.

2.1.1 OSHPD:

The applicable OSHPD Sections and Chapters of the CBC are beyond the scope of this supplement.

2.1.2 DSA:

The applicable DSA Sections and Chapters of the CBC are beyond the scope of this supplement.

2.2 CRC:

The MiTek caps and bases for wood-framed construction, described in Sections 2.0 through 7.0 of the evaluation report ESR-3449, comply with CRC Chapter 3, provided the design and installation are in accordance with the 2024 and 2021 *International Residential Code®* (IRC) provisions noted in the evaluation report and the additional requirements of CRC Chapter 3, as applicable.

This supplement expires concurrently with the evaluation report, reissued October 2025, and revised August 2026.

ICC-ES Evaluation Reports are not to be construed as representing aesthetics or any other attributes not specifically addressed, nor are they to be construed as an endorsement of the subject of the report or a recommendation for its use. There is no warranty by ICC Evaluation Service, LLC, express or implied, as to any finding or other matter in this report, or as to any product covered by the report.

Copyright © 2026 ICC Evaluation Service, LLC. All rights reserved.

DIVISION: 06 00 00—WOOD, PLASTICS AND COMPOSITES
Section: 06 05 23—Wood, Plastic, and Composite Fastenings

REPORT HOLDER:

MITEK® INC.

EVALUATION SUBJECT:

MITEK® CAPS AND BASES FOR WOOD-FRAMED CONSTRUCTION

1.0 REPORT PURPOSE AND SCOPE

Purpose:

The purpose of this evaluation report supplement is to indicate that MiTek caps and bases for wood-framed construction, described in ICC-ES evaluation report ESR-3449, have also been evaluated for compliance with the codes noted below.

Applicable code editions:

- 2026 and 2023 *Florida Building Code—Building*
- 2026 and 2023 *Florida Building Code—Residential*

2.0 CONCLUSIONS

The MiTek caps and bases, described in Sections 2.0 through 7.0 of the evaluation report ESR-3449, comply with the *Florida Building Code—Building* and the *Florida Building Code—Residential,* provided the design requirements are determined in accordance with the *Florida Building Code—Building* or the *Florida Building Code—Residential*, as applicable. The installation requirements noted in ICC-ES evaluation report ESR-3449 for the 2024 and 2021 *International Building Code®* meet the requirements of the *Florida Building Code—Building* or the *Florida Building Code—Residential*, as applicable, with the following conditions:

- For use within 3,000 feet of a saltwater coastline, fasteners and connectors must comply with Section 1711 and Table 1711.1 of the 2026 *Florida Building Code—Building* or Section R332 and Table R332.1 of the 2026 *Florida Building Code—Residential*, as applicable.
- The MiTek caps and bases described in the evaluation report are structural connectors used for connecting wood framing members in accordance with Section 2304.10.3 of the *Florida Building Code—Building*. The connectors may also be used in structures regulated under the *Florida Building Code—Residential* when an engineered design is submitted to, and approved by the code official, in accordance with Section R301.1.3 of the *Florida Building Code—Residential*.
- Connectors and fasteners used in contact with preservative-treated or fire-retardant-treated wood must comply with Section 2304.10.5 of the *Florida Building Code—Building* or Section R317.3 of the *Florida Building Code—Residential*, as applicable.

Use of the MiTek caps and bases has also been found to be in compliance with the High-Velocity Hurricane Zone (HVHZ) provisions of the *Florida Building Code—Building*, and the *Florida Building Code—Residential* with the following condition:

a. For connections subject to uplift, the connection must be designed for no less than 700 pounds (3114 N).

For products falling under Florida Rule 61G20-3, verification that the report holder's quality-assurance program is audited by a quality-assurance entity approved by the Florida Building Commission for the type of inspections being conducted is the responsibility of an approved validation entity (or the code official, when the report holder does not possess an approval by the Commission). Florida Rule 61G20-3 is applicable to products and/or systems which comprise the building envelope and structural frame for compliance with the structural requirements of the Florida Building Code.

This supplement expires concurrently with the evaluation report ESR-3449, reissued October 2025 and revised August 2026.

ICC-ES Evaluation Reports are not to be construed as representing aesthetics or any other attributes not specifically addressed, nor are they to be construed as an endorsement of the subject of the report or a recommendation for its use. There is no warranty by ICC Evaluation Service, LLC, express or implied, as to any finding or other matter in this report, or as to any product covered by the report.

Copyright © 2026 ICC Evaluation Service, LLC. All rights reserved.